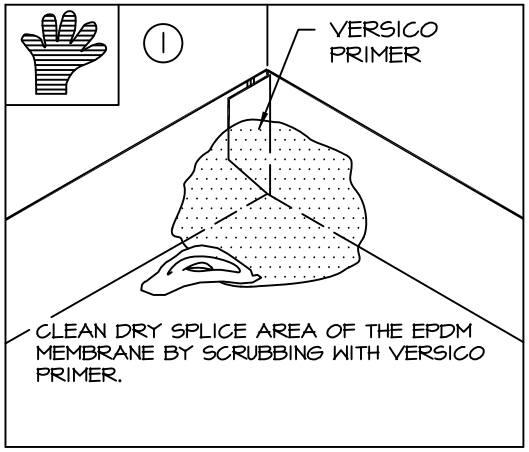

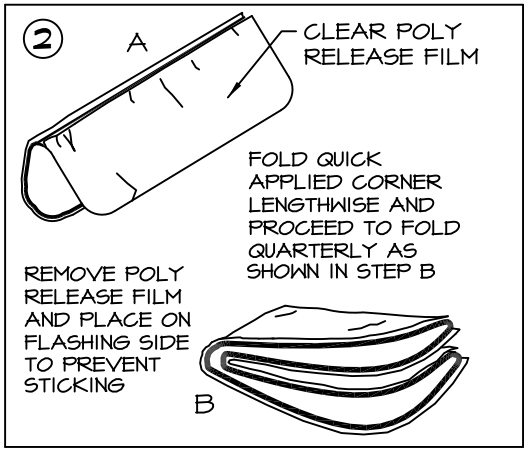

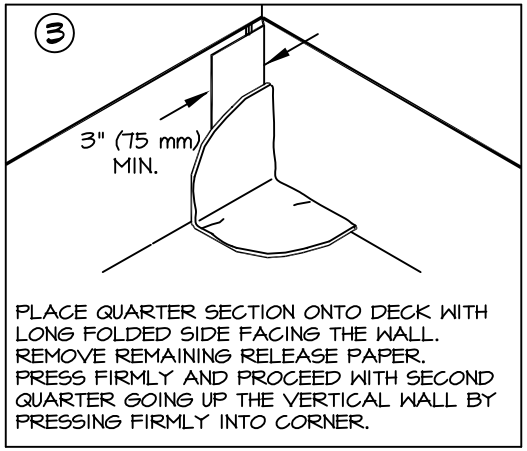

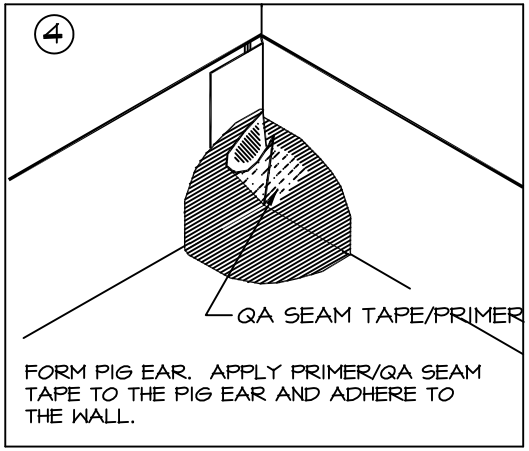

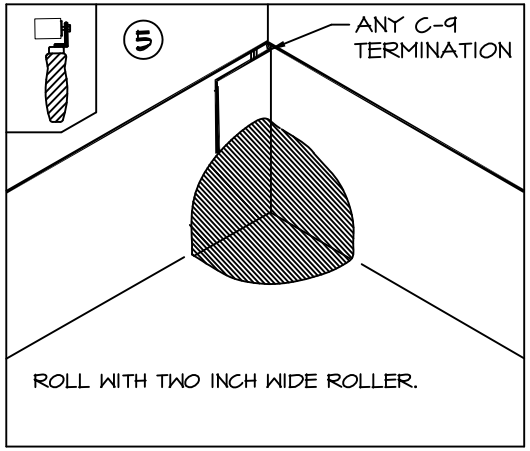

C-15.5

VERSICO (BLACK OR WHITE) QUICK APPLIED INSIDE CORNER WITH CURED MEMBRANE

VERSICO ROOFING SYSTEMS

© 2007 VERSICO, LLC